MFA3520 (TENTATIVE)

SENKO/ADL

Type		MANUAL MONO	Mount		C
Focal Length		35mm	Back Focus		18.06mm
Fno.		F2.0	Mechanical Bf		13.5mm
Designed Image Format		2/3"(6.6x8.8mm)	Exit Pupil		−33.98mm
Operation Range	Iris	F2.0−22	Filter Size		−
	Focus	0.25m ~ infinity	Aperture	Front	ø17.8mm
	Zoom	−		Rear	ø11.8mm
Control	Iris	Manual			
	Focus	Manual	TV Distortion		−0.02%
	Zoom	−	Vignetting		−29%
Object Size at MOD		33.6 x 46.2mm	Dimention		ø29x38.5mm
		−	Weight		55g
Field of View	V	2/3" 10.4°	1/2" 7.8°		
	H	2/3" 14.3°	1/2" 10.4°		
	D	2/3" 17.8°	1/2" 13.0°		
Operating Temperature		−10 ~+50 Celsius			

2/3"

C

DIMENSIONS

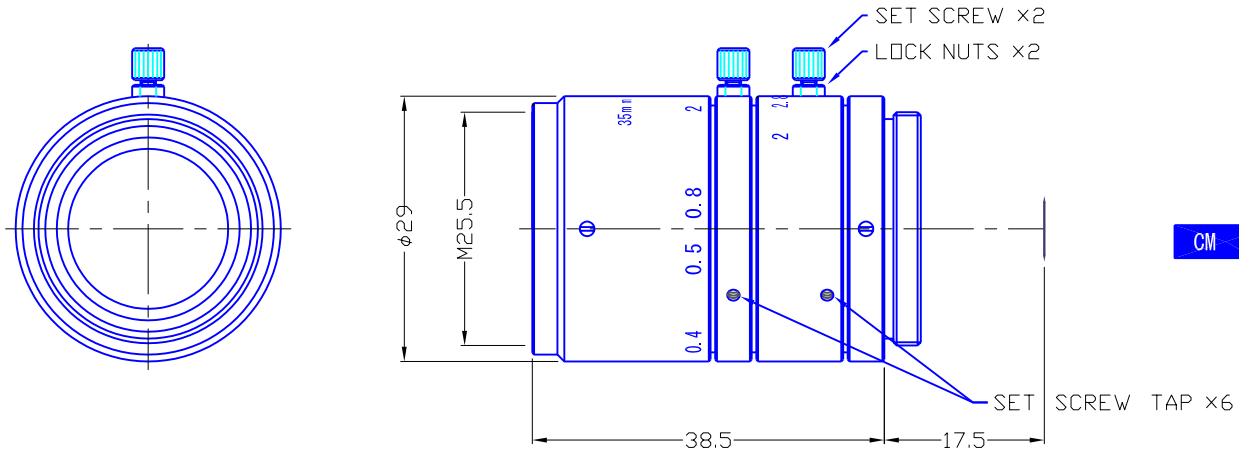

CM

MAGNIFICATION

( ) : 14"MONITOR TV

O/I = 2000mm : −0.01804X(0.58X) O/I = 400mm : −0.10391X (3.36X)
O/I = 800mm : −0.04737X(1.53X) O/I = 300mm : −0.14879X (4.81X)
O/I = 500mm : −0.07997X(2.59X) O/I = 250mm : −0.19046X (6.16X)

Subject to change without notice