GOYO OPTICAL INC.

Industrial Lens

1inch Format High Resolution Lenses

Item No.GMTHR41614MCN

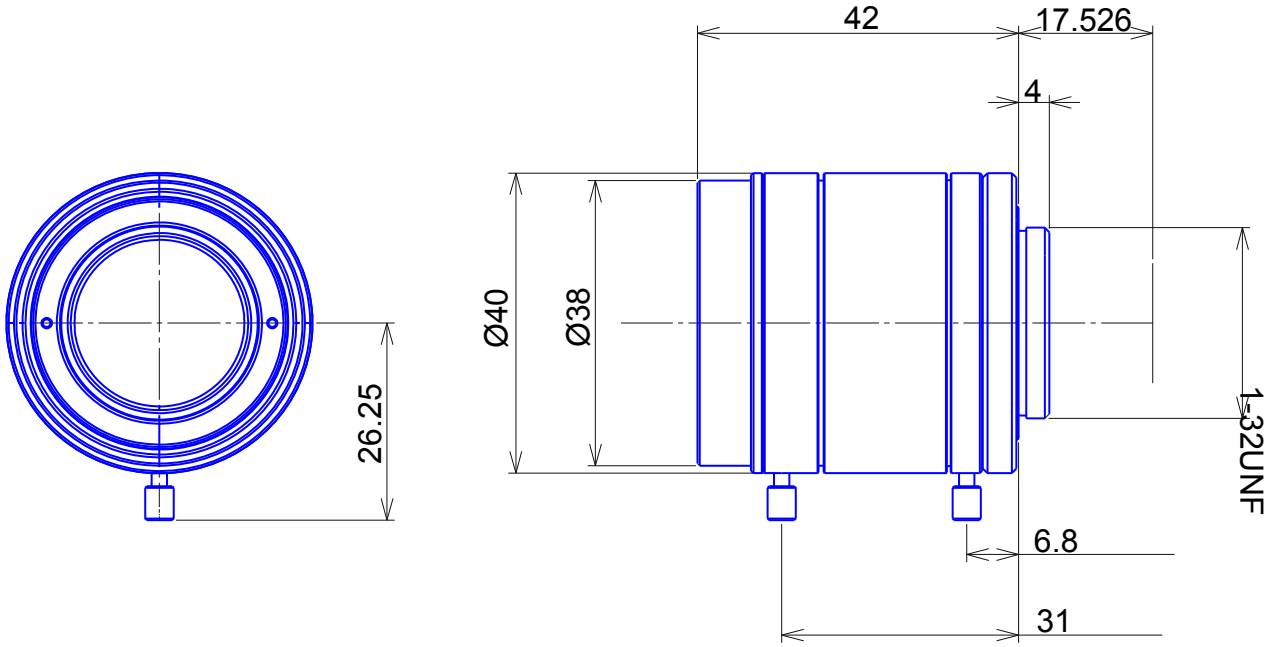

ITEM NO.		GMTHR41614MCN
Focal Length		16.0 (mm)
Iris Range		F1.4 - 22
Angle of View (Hx V x D)	1″	44.5° x 33.8° x 54.6°
MOD		0.3 (m)
Filter Thread		M=35.5 , P=0.5
Dimention (D x L)		Ø40 x 42 (mm)
Weight		- (g)

GOYO OPTICAL Inc.,
3-8-31 HAMASAKI, ASAKA, SAITAMA 351-0033, JAPAN,
TEL:+81-48-474-2235 FAX:+81-48-474-7373
http://www.goyooptical.com E-MAIL:info@goyooptical.com